Designation: D 4803 – 97 (Reapproved 2002)$^{\epsilon 1}$

An American National Standard

Standard Test Method for Predicting Heat Buildup in PVC Building Products[1]

This standard is issued under the fixed designation D 4803; the number immediately following the designation indicates the year of original adoption or, in the case of revision, the year of last revision. A number in parentheses indicates the year of last reapproval. A superscript epsilon (ϵ) indicates an editorial change since the last revision or reapproval.

ϵ[1] NOTE—Footnote text inadvertently left out of Table 1 was reinserted editorially in March 2003.

1. Scope *

1.1 This test method covers prediction of the heat buildup in rigid and flexible PVC building products above ambient air temperature, relative to black, which occurs due to absorption of the sun's energy.

NOTE 1—This test method is expected to be applicable to all types of colored plastics. The responsible subcommittee intends to broaden the scope beyond PVC when data on other materials is submitted for review.

NOTE 2—There are no ISO standards covering the primary subject matter of this test method.

1.2 Rigid PVC exterior profile extrusions for assembled windows and doors are covered in Specification D 4726.

1.3 Rigid PVC exterior profiles for fencing are covered in Specification F 964.

1.4 Rigid PVC siding profiles are covered in Specification D 3679.

1.5 Rigid PVC soffit profiles are covered in Specification D 4477.

1.6 Rigid PVC and Rigid CPVC plastic building products compounds are covered in Specification D 4216.

1.7 The text of this test method references notes and footnotes which provide explanatory material. These notes and footnotes (excluding those in tables and figures) shall not be considered as requirements of this test method.

1.8 The values stated in inch-pound units are to be regarded as the standard.

1.9 *This standard does not purport to address all of the safety concerns, if any, associated with its use. It is the responsibility of the user of this standard to establish appropriate safety and health practices and determine the applicability of regulatory limitations prior to use.* Specific safety hazard statements are given in Section 7.

2. Referenced Documents

2.1 *ASTM Standards:*

D 883 Terminology Relating to Plastics[2]

D 1600 Terminology for Abbreviated Terms Relating to Plastics[2]

D 1898 Practice for Sampling Plastics[3]

D 3010 Practice for Preparing Compression-Molded Test Sample Plaques of Rigid Poly(Vinyl Chloride) Compounds[4]

D 3679 Specification for Rigid Poly(Vinyl Chloride) (PVC) Siding[5]

D 4216 Specification for Rigid Poly(Vinyl Chloride) (PVC) and Related PVC and CPVC Plastic Building Product Compounds[6]

D 4477 Specification for Rigid Poly(Vinyl Chloride) (PVC) Soffit[5]

D 4726 Specification for Rigid Poly(Vinyl Chloride) (PVC) Exterior Profile Extrusions Used for Assembled Windows and Doors[5]

E 631 Terminology of Building Construction[7]

F 964 Specification for Rigid Poly(vinyl chloride) (PVC) Exterior Profiles Used for Fencing[7]

3. Terminology

3.1 Definitions—Definitions are in accordance with Terminologies D 883 or E 631 and abbreviations with Terminology D 1600 unless otherwise indicated.

3.2 *Definitions of Terms Specific to This Standard:*

3.2.1 *heat buildup*—the increase in temperature above that of ambient air due to the amount of energy absorbed by a specimen from the sun.

[1] This test method is under the jurisdiction of ASTM Committee D20 on Plastics and is the direct responsibility of Subcommittee D20.24 on Plastic Building Products.

Current edition approved Nov. 10, 2002. Published March 2003. Originally approved in 1989. Last previous edition approved in 1997 as D 4803 – 97.

[2] *Annual Book of ASTM Standards*, Vol 08.01.

[3] Discontinued. See 1997 *Annual Book of ASTM Standards*, Vol 08.01.

[4] Discontinued. Replaced by D 4703, *Annual Book of ASTM Standards*, Vol 08.03.

[5] *Annual Book of ASTM Standards*, Vol 08.04.

[6] *Annual Book of ASTM Standards*, Vol 08.02.

[7] *Annual Book of ASTM Standards*, Vol 04.11.

***A Summary of Changes section appears at the end of this standard.**

Copyright © ASTM International, 100 Barr Harbor Drive, PO Box C700, West Conshohocken, PA 19428-2959, United States.

Copyright ASTM International
Provided by IHS under license with ASTM
No reproduction or networking permitted without license from IHS

Sold to:FOILING SERVICES LTD, W0453512
Not for Resale,2007/10/26 6:40:59 GMT

3.2.2 *temperature rise*—the increase in temperature above that of ambient (laboratory) air due to absorption of energy from a heating lamp (source).

4. Summary of Test Method

4.1 The PVC product (extruded product, injection molded part, or compression molded) is cut apart to obtain a flat test specimen at least 3 by 3 by 0.060 ± 0.020 in. (76 by 76 by 1.5 ± 0.5 mm).

4.2 The test specimen is heated under the infrared reflective heat lamp to determine the temperature rise above ambient (laboratory) temperature relative to a black control sample.

4.3 The temperature rise data, obtained in the laboratory for a given test specimen, is then used to predict the heat buildup, which may occur outdoors due to the sun.

5. Significance and Use

5.1 Heat buildup in PVC exterior building products due to absorption of the energy from the sun may lead to distortion problems. Heat buildup is affected by the color, emittance, absorptance, and reflectance of a product. Generally, the darker the color of the product, the more energy is absorbed and the greater is the heat buildup. However, even with the same apparent color, the heat buildup may vary due to the specific pigment system involved. The greatest heat buildup generally occurs in the color black containing carbon black pigment. The black control sample used in this test method contains 2.5 parts of furnace black per 100 parts of PVC suspension resin. The maximum temperature rise above ambient temperature for this black is 90°F (50°C) for a 45° or horizontal surface when the sun is perpendicular to the surface and 74°F (41°C) for a vertical surface assuming that the measurements were done on a cloudless day with no wind and heavy insulation on the back of the specimen.[8] See Appendix X1.

5.2 This test method allows the measurement of the temperature rise under a specific type heat lamp, relative to that of a black reference surface, thus predicting the heat buildup due to the sun's energy.

5.3 The test method allows prediction of heat buildup of various colors or pigment systems, or both.

5.4 This test method gives a relative heat buildup compared to black under certain defined severe conditions but does not predict actual application temperatures of the product. These will also depend on air temperature, incident angle of the sun, clouds, wind velocity, insulation, installation behind glass, etc.

6. Apparatus

6.1 *Testing Apparatus*—The apparatus shall be constructed essentially as shown in Fig. 1 and shall consist of the following:

6.1.1 *Wooden Box*, opened from the top and the front and lined with 1-in. (25.4-mm) thick white rigid hydrous calcium silicate heat insulation.

6.1.2 *White Infrared Heat Lamp*, 250-W.[9]

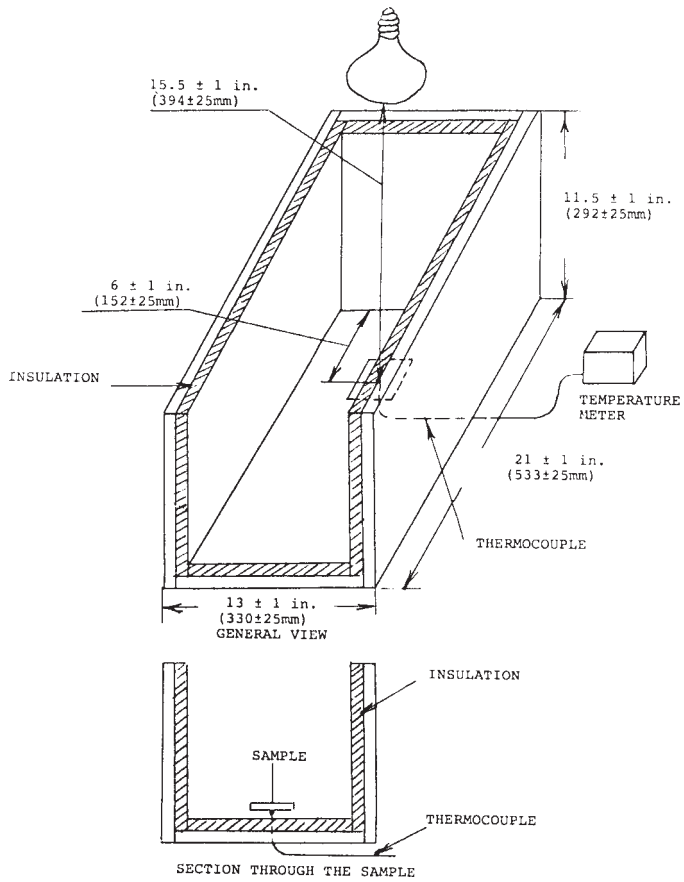

FIG. 1 Apparatus for Measuring Temperature Rise

6.1.3 *Thermocouple*, 40-gage Type J (iron-constantan); or equivalent.

6.1.4 *Digital Read-Out Temperature Meter*, Type J; or equivalent.

NOTE 3—The type of insulation may affect absolute temperature rise. However, the calculated values of predicted maximum heat buildup, relative to a black does not appear to be affected, based on a laboratory study comparing white rigid hydrous calcium silicate heat insulation with aluminum foil insulation having equivalent thermal resistance.

NOTE 4—The intensity of the heat lamp has an effect on absolute temperature rise, however, it does not appear to influence the calculated values of predicted maximum heat buildup relative to the black control. The 250-W infrared heat lamp was selected because a higher intensity lamp results in excessive temperature rise. This leads to excessive softening of the specimen under study, especially in the case of the black control. A lower intensity lamp requires a longer testing time and, therefore, is considered undesirable.

6.2 The thermocouple shall be inserted through a 0.125-in. (3.18-mm) hole in the bottom of the box, so that it extends 0.25 in. (6.35 mm) above the bottom surface of the box. The thermocouple bends under the weight of the specimen, but shall retain contact with the specimen when the specimen is in place. The lamp shall be installed perpendicular to the thermocouple. A specimen location grid may be inscribed on the bottom of the box to facilitate centering of the thermocouple in relation to the specimen.

6.3 The distance from the bottom of the box to the bottom surface of the lamp shall be 15.5 ± 1 in. (39.4 ± 2.5 cm).

[8] Summers and Brown, *SPE Technical Papers*, XXV, 1979, p. 403.

[9] A G.E. heat lamp has been found satisfactory for this purpose.

Copyright ASTM International
Provided by IHS under license with ASTM
No reproduction or networking permitted without license from IHS
Sold to:FOILING SERVICES LTD, W0453512
Not for Resale,2007/10/26 6:40:59 GMT

NOTE 5—Calculated heat buildup for the specimens is independent of the distance between the light source and the surface of the specimen. However, shorter distances lead to very high maximum equilibrium temperatures, especially for dark colors, which might cause distortion of the specimen. Larger distances between the light source and the specimen cause less test sensitivity and less reproducibility.

6.4 Install the apparatus in a room characterized by still air without drafts due to air conditioning, etc.

7. Safety Precautions

7.1 The heating lamp is hot during the test. Touching it will cause burns.

8. Sampling

8.1 Select samples in accordance with Practice D 1898. The samples shall be representative of the color or pigment system, or both, under study.

9. Test Specimens

9.1 Test flat smooth-surfaced test specimens at least 3 by 3 by 0.060 ± 0.020 in. (76 by 76 by 1.5 ± 0.5 mm), cut from the selected samples.

9.2 A similar size control specimen shall be prepared from any rigid PVC compound containing 2.5 parts Black Pearls 700[10] or equivalent furnace type carbon black without any other pigmentation. See Practice D 4703.

10. Procedure

10.1 Maintain the ambient air temperature in the laboratory, measured 3 ft from the side of the testing box, at 75 ± 5°F.

10.2 Set the specimen on the bottom of the box using sample location grid so that its center is in contact with the thermocouple. Two-sided adhesive tape may be used between the specimen and the box to ensure contact with the thermocouple.

10.3 Turn on the heat lamp and digital read out temperature meter.

10.4 From the temperature meter, record the equilibrium temperature of the specimen. Usually it takes no more than 30 min for the PVC specimens having thickness equal to or less than 0.075 in. (1.9 mm). See Fig. 2 for relationship of the time required to reach equilibrium temperature and the thickness of the PVC specimens.

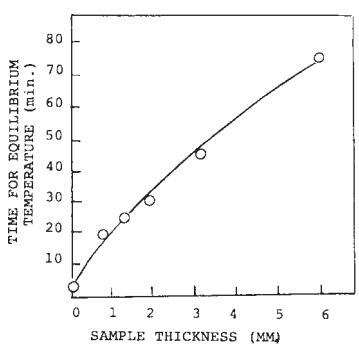

FIG. 2 Time for Maximum Equilibrium Temperature Rise as a Function of the Sample Thickness for Poly(Vinyl Chloride)

10.5 Measure the maximum temperature of the control specimen prior to the specimens under study but within 2 h of the other temperature rise measurements.

11. Calculation

11.1 Temperature rise above ambient temperature:

$$\Delta Tlu = Tm - Ta \tag{1}$$

where:

ΔTlu = temperature rise above ambient temperature in the laboratory under the heat lamp,
Tm = maximum temperature of the specimen, as read from the digital temperature meter, and
Ta = ambient air temperature in the laboratory.

11.2 Heat buildup:

$$\Delta T = \frac{\Delta Tlu}{\Delta Tlb} \times \Delta Tb \tag{2}$$

where:

ΔT = predicted heat buildup of the specimen under study due to heating by the sun,
ΔTlu = temperature rise above ambient temperature in the laboratory for the specimen under study,
ΔTlb = temperature rise above ambient temperature in the laboratory for a black control sample,
ΔTb = heat buildup for a black control sample under controlled conditions due to absorption of the sun's energy (found experimentally),
ΔTb = for vertical position, 74°F or 41°C, and
ΔTb = for horizontal position, 90°F or 50°C.

NOTE 6—Conversion equations for ΔTb are as follows:

$$°C_2 - °C_1 = (°F_2 - 32)5/9 - (°F_1 - 32)5/9$$

$$°C_2 - °C_1 = 5/9°F - 5/9 \times 32 - 5/9°F + 5/9 \times 32$$

$$\Delta°C = 5/9\Delta°F \text{ (conversion equation)}$$

11.3 To determine maximum temperature the specimen can achieve outdoors under the most severe conditions (clear skies, no wind, sun is perpendicular to the specimen), the predicted heat buildup temperature must be added to the ambient temperature.

12. Report

12.1 The report shall include the following:

12.1.1 Complete identification of the specimen tested, color, manufacturer's code,

12.1.2 Temperature rise above ambient air temperature in the laboratory for the black control specimen,

12.1.3 Temperature rise above ambient air temperature in the laboratory for the specimen under study, and

12.1.4 Heat buildup, degrees Fahrenheit (degrees Celsius), of the test specimen under study.

13. Precision and Bias

13.1 For precision and bias data, see Table 1.

14. Keywords

14.1 heat buildup; PVC building products; sun energy absorption; weathering

[10] Available from Cabot Corp., P.O. Box 188, Tuscola, IL 61953.

Copyright ASTM International
Provided by IHS under license with ASTM
No reproduction or networking permitted without license from IHS
Sold to:FOILING SERVICES LTD, W0453512
Not for Resale,2007/10/26 6:40:59 GMT

TABLE 1 Precision and Bias[A,B]

Material	Color	Mean Heat Buildup, °C	Values as a Percentage of the Mean			
			Sr	S_R	*Ir*	I_R
M1	Gray	31.25	3.3	5.1	9.3	14.4
M 2	Beige	27.76	4.7	6.8	13.3	19.2
M 3	Beige	29.63	3.1	8.8	8.8	24.9
M 4	Gray	24.08	2.3	5.8	6.5	16.4
M 5	Brown	34.56	6.0	7.5	17.0	21.2
M 6	White	20.18	5.8	10.9	16.4	30.8
M 7	Brown	33.38	6.0	3.6	17.0	10.2
M 8	Beige	26.75	7.5	4.5	21.2	12.7
M 9	Green	28.12	4.4	7.5	12.5	21.2
M 10	Brown	39.34	2.7	2.8	7.6	7.9
M 11	Beige	27.32	4.3	6.6	12.2	18.7
M 12	Brown	34.49	6.4	4.0	18.1	11.3
M 13	Green	34.28	2.8	4.4	7.9	12.4
Precision (Average) →			4.8	6.1	13.6	17.3

[A] Table 1 is based on a round-robin study conducted in 1985, involving 13 materials tested by 6 laboratories. Each test result was based on 44 individual determinations. Each laboratory obtained 8 test results for each material. Supporting data have been filed at ASTM International Headquarters and may be obtained by requesting Research Report RR: D20–1142.

[B] In Table 1, for the materials indicated:

Sr = pooled within-laboratories standard deviation of the average of 40 test specimens,

S_R = pooled within-laboratories standard deviation of the average of 40 test specimens,

Ir = 2.83 *Sr* —repeatability, and

I_R = 2.83 S_R —reproducibility.

APPENDIX

(Nonmandatory Information)

X1. CORRELATION OF HEAT LAMP TO SOLAR ENERGY HEATING OF VINYL

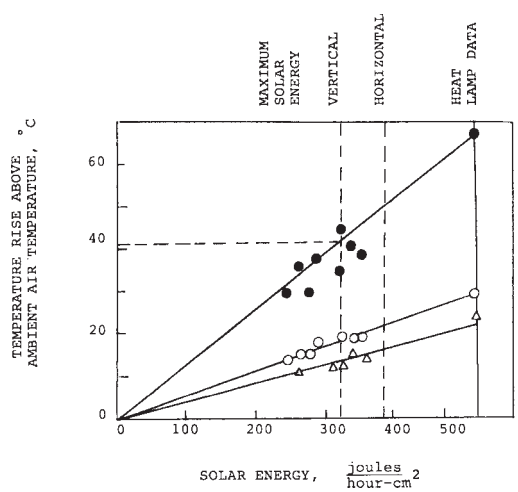

NOTE—Source: Summers and Brown, *SPE Technical Papers*, XXV, 1979, p. 403.

FIG. X1.1 Correlation of Heat Lamp to Solar Energy Heating of Vinyl

Copyright ASTM International
Provided by IHS under license with ASTM
No reproduction or networking permitted without license from IHS
Sold to:FOILING SERVICES LTD, W0453512
Not for Resale,2007/10/26 6:40:59 GMT

SUMMARY OF CHANGES

Committee D20 has identified the location of the following changes to this standard since the last issue (D 4495-93) that may impact on the use of this standard.

(1) Added exterior product references in Section 1 and Section 2.1.
(2) Added 1.7 regarding notes.
(3) Revised 3.1 to reference Terminologies E 631 and D 1600.
(4) Revised 11.1 and added note to clarify calculations of Δ *Tb*.

ASTM International takes no position respecting the validity of any patent rights asserted in connection with any item mentioned in this standard. Users of this standard are expressly advised that determination of the validity of any such patent rights, and the risk of infringement of such rights, are entirely their own responsibility.

This standard is subject to revision at any time by the responsible technical committee and must be reviewed every five years and if not revised, either reapproved or withdrawn. Your comments are invited either for revision of this standard or for additional standards and should be addressed to ASTM International Headquarters. Your comments will receive careful consideration at a meeting of the responsible technical committee, which you may attend. If you feel that your comments have not received a fair hearing you should make your views known to the ASTM Committee on Standards, at the address shown below.

This standard is copyrighted by ASTM International, 100 Barr Harbor Drive, PO Box C700, West Conshohocken, PA 19428-2959, United States. Individual reprints (single or multiple copies) of this standard may be obtained by contacting ASTM at the above address or at 610-832-9585 (phone), 610-832-9555 (fax), or service@astm.org (e-mail); or through the ASTM website (www.astm.org).

Copyright ASTM International
Provided by IHS under license with ASTM
No reproduction or networking permitted without license from IHS
Sold to:FOILING SERVICES LTD, W0453512
Not for Resale,2007/10/26 6:40:59 GMT